# VORTICENT CMS ATEX 22/9 T4 0,37kW Zone 2: FAN (Ex h IIB T3 Gc) + MOTOR (Ex ec IIC T3 Gc) (30179)

## GENERAL DATA

CENTRIFUGAL MEDIUM PRESSURE ATEX FAN

MANUFACTURING FEATURES

• Rolling steel sheet housing.
• Completely joined or welded housing.
• Galvanised steel sheet simple inlet forward curved impeller.
• Polyester powder finishing coat.
• Inlet sparkproof ring made of copper or aluminium.
• ATEX standard asynchronous motor. ATEX certified according to the zone. IP55 protection,  and class F insulation. Manufactured with standard voltages: 230V 50Hz for single phase motors, 230/400V 50Hz for three phase motors up to 4kW and 400/690V 50Hz for higher powers.

• Available positions (to be indicated in case of order): LG270, LG0, LG45, LG90, LG135, LG180, LG225, LG315, RD0, RD45, RD90, RD135, RD180, RD225, RD270, RD315.
• The indicated codes correspond to the model in position LG270

APPLICATIONS
Designed for inline installation, they are suitable for:
• Ventilation in indoor environments classified as ATEX
• Working temperature: ambient from -20ºC to 40ºC, transported air according to the ATEX clasification.
• Suitable for transporting totally clean air without dust.

UNDER REQUEST
• 60Hz fans and special voltages.

ORGANISM: L.O.M.
CERTIFICAT Nº:  LOM 17.407N-C

In compliance with the Directive 2014/34/UE

## PERFORMANCE CURVE

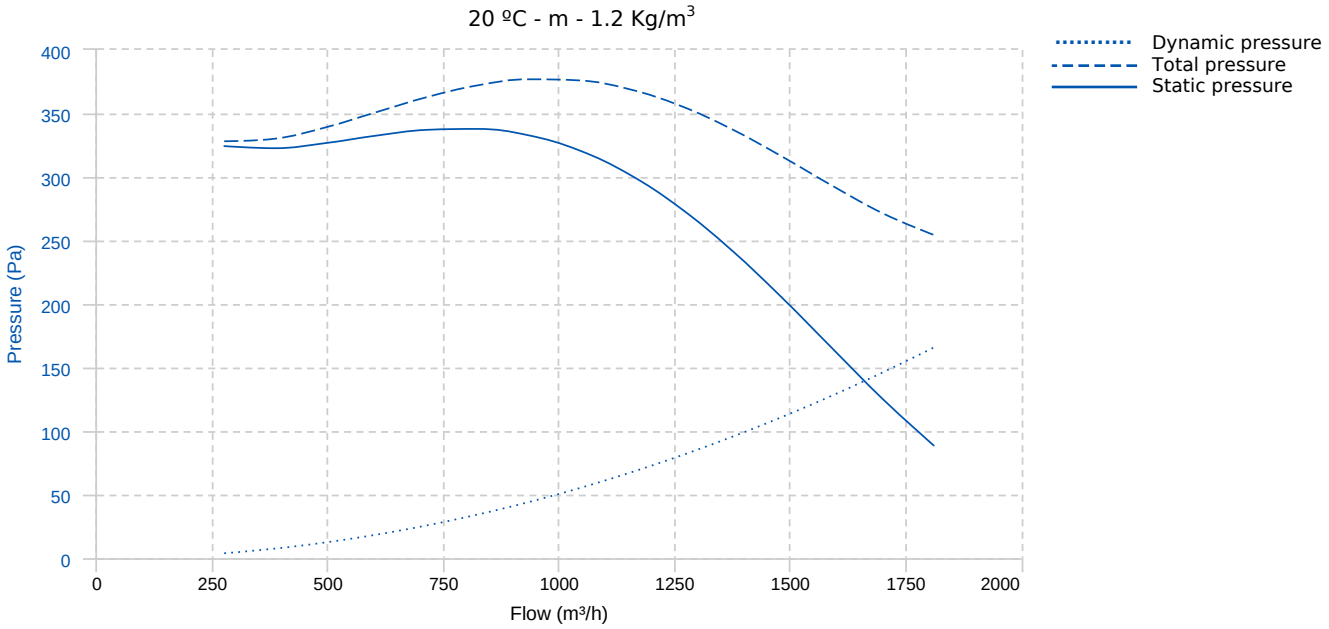


## TECHNICAL DATA

| Fan | | | | | | | |
|---|---|---|---|---|---|---|---|
| RPM | 1410 | Approx. weight | 21 kg | Max. Flow | 1830 m³/h | | |
| **Motor** | | | | | | | |
| Power | 0,37 kW | RPM | 1410 | I max. (400V) | 1,2 A | Size | 71 |
| Approx. weight | 7 kg | Efficiency (%) | 66 % | FP | 0.73 | | |

## DIMENSIONS

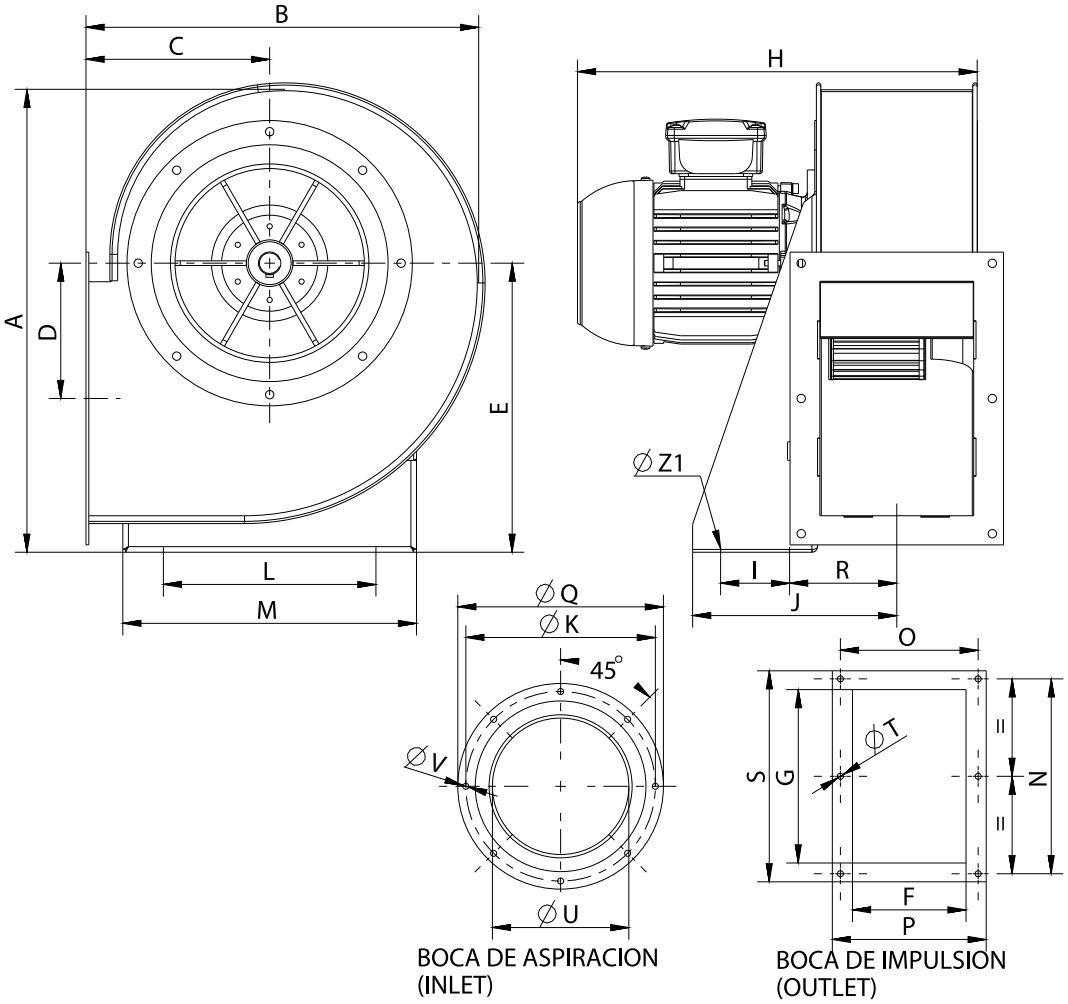


| Dimensions (mm) | | | | | | | | | |
|---|---|---|---|---|---|---|---|---|---|
| A | 455 | B | 393,5 | C | 184 | D | 140 | E | 280 |
| F | 140 | G | 216 | H | 369,5 | I | 50 | J | 182.5 |
| K | 256 | L | 220 | M | 290 | N | 256 | O | 180 |
| P | 204 | Q | 280 | R | 102 | S | 282 | TØ | 9 |
| UØ | 180 | VØ | 9 | Z1Ø | 11 | | | | |

## WIRING DIAGRAM

**230V** △

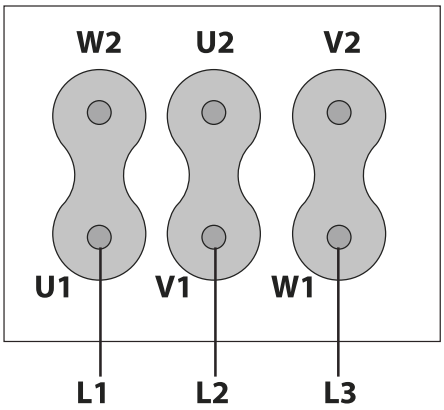


**400V** ⅄

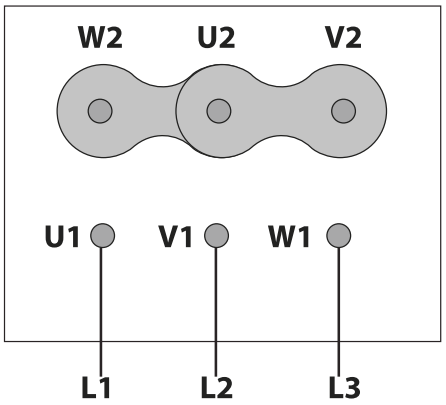


## ACCESSORIES

**INLET PROTECTION GUARD FOR CENTRIFUGAL FANS**
**MSRA 22/9**
**REF:** 20240

**ANTI-VIBRATION JOINT**
**FJ-F450**
**REF:** 21669

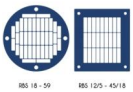

**OUTLET PROTECTION GUARD**
**MSRBS 22/9**
**REF:** 20253

**FREQUENCY SPEED CONTROLLER**
**IREM INVERTER 230 2.5A**
**REF:** 12872

**ANTI-VIBRATION RUBBER BLOCK**
**NRD-F400 (GENERIC)**

**ANTI-VIBRATING FLANGE 400º/2H**
**FLC1-F400 25**
**REF:** 21987

**CONECTION FLANGE**
**MFLAC 22/9**
**REF:** 20233

**ATEX SWITCH**
**INT 16 ATEX**
**REF:** 20355

**FREQUENCY SPEED CONTROLLER**
**IRET INVERTER 400 1.2A**
**REF:** 12876

**ANTI-VIBRATION SPRING BLOCK**
**XS-F400 (GENERIC)**